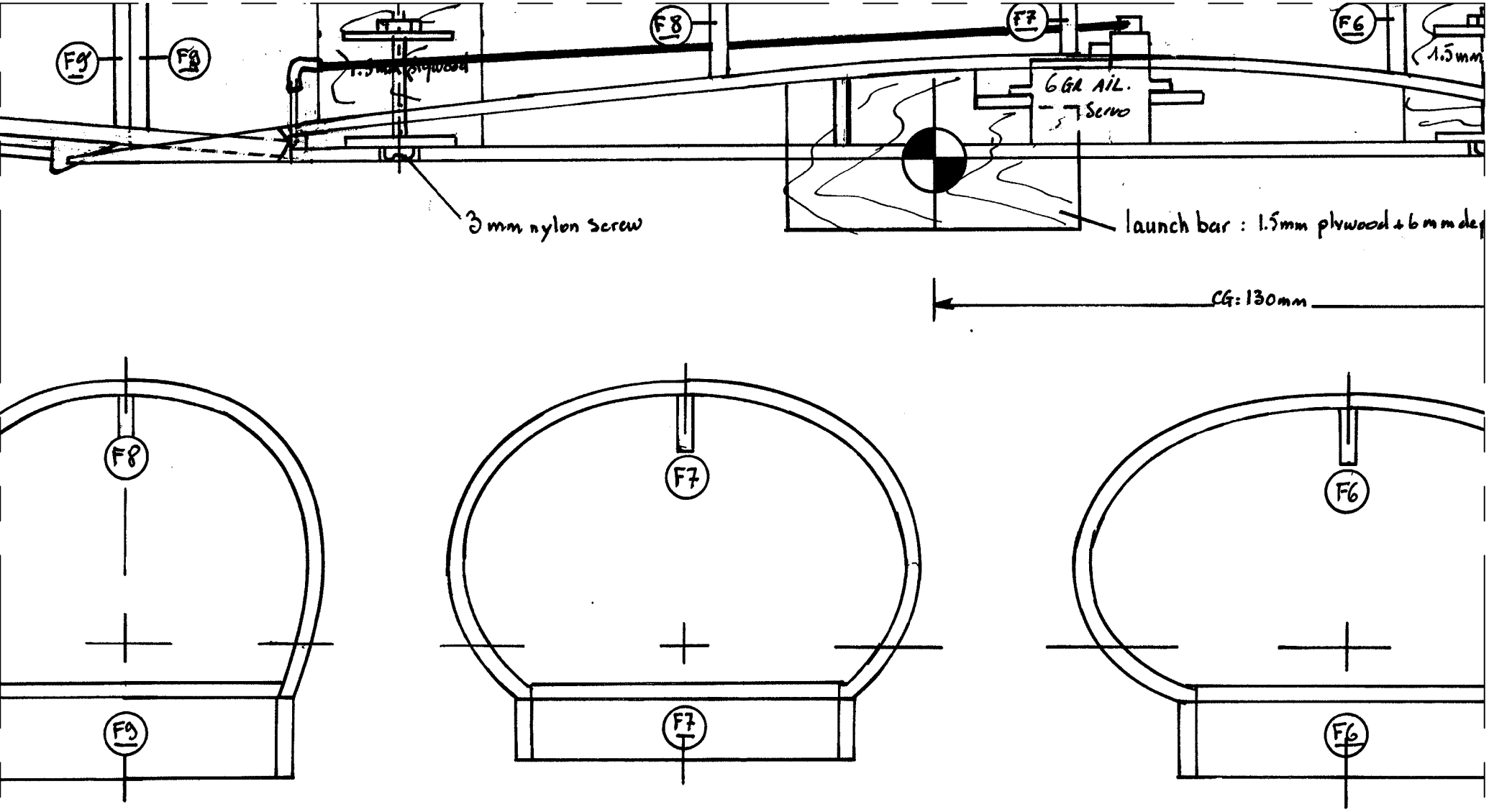
F9
F8
F8
F7
F6
1.5mm
6 GR AIL.
Servo
3 mm nylon screw
launch bar : 1.5mm plywood + 6 mm de
CG: 130mm
F8
F9
F7
F7
F6
F6